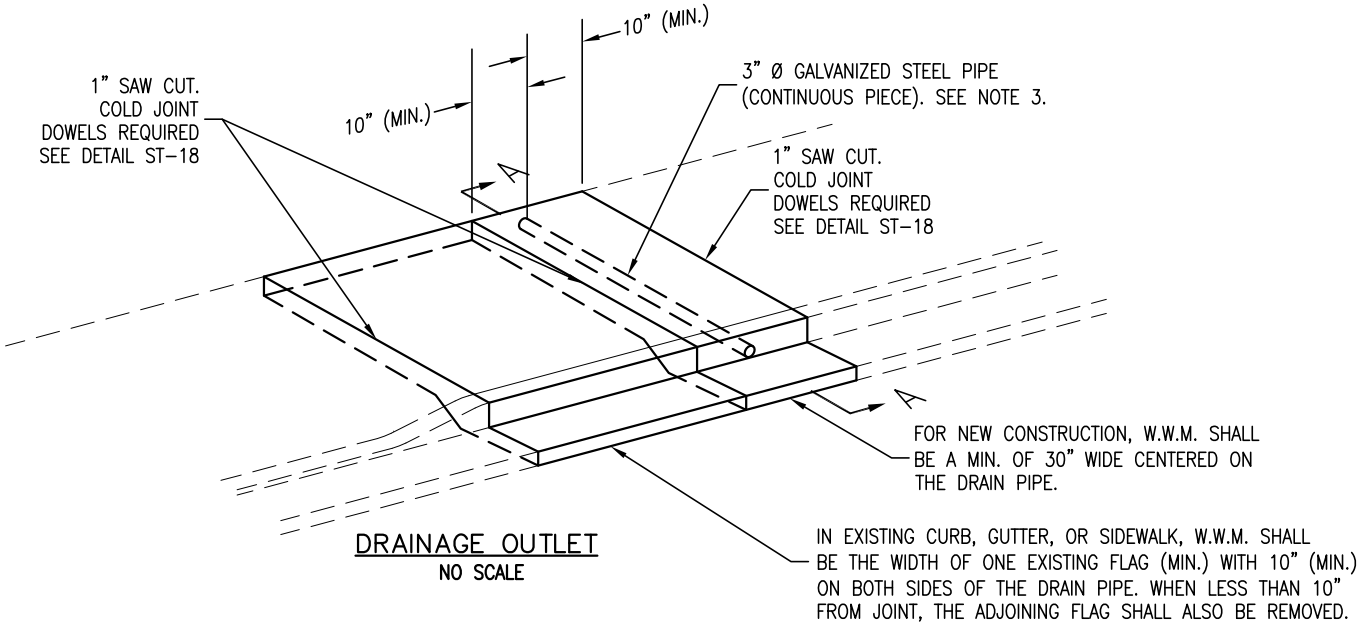

DRAINAGE OUTLET
NO SCALE

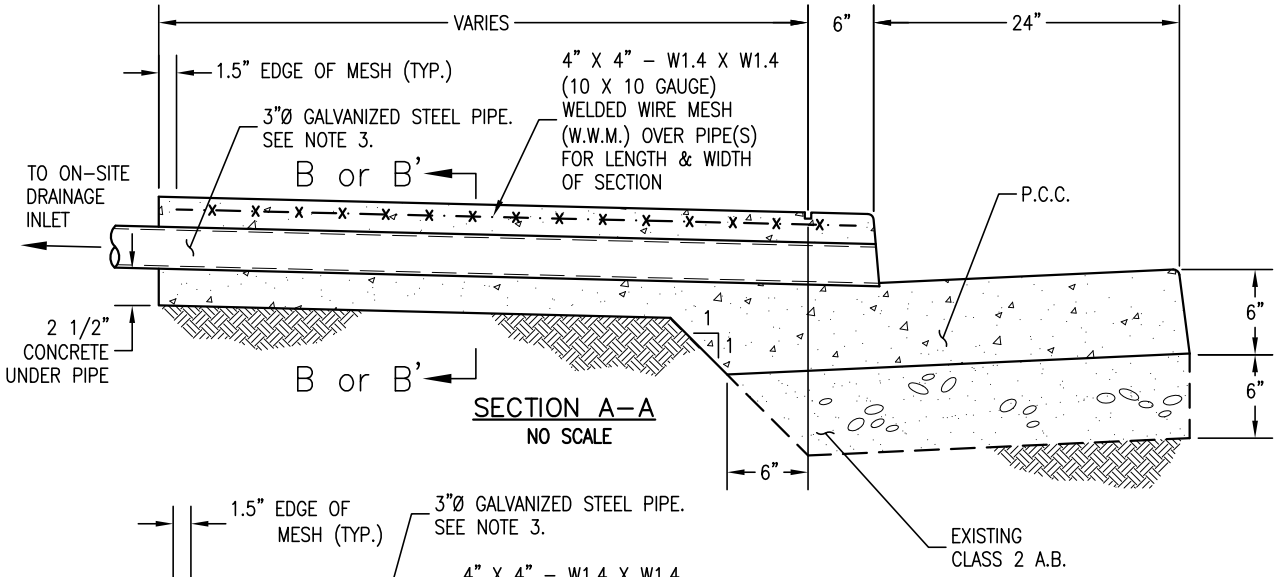

SECTION A–A
NO SCALE

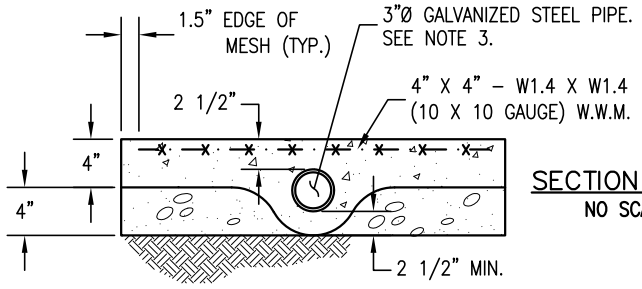

SECTION B–B
NO SCALE

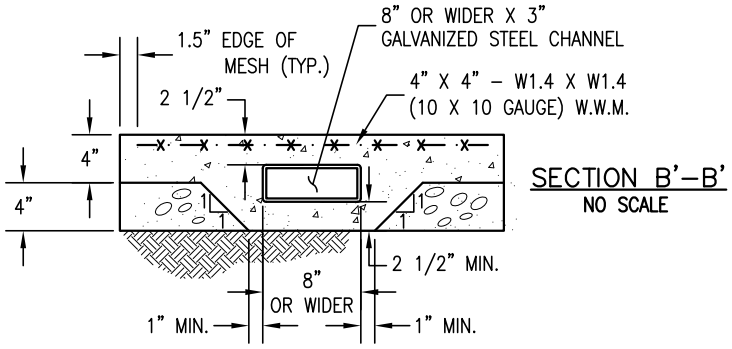

SECTION B'–B'
NO SCALE

NOTES:

1. STEEL PIPE OR CHANNEL SHALL BE ONE CONTINUOUS LENGTH FROM PROPERTY LINE TO CURB FACE.
2. WHERE TWO PIPES ARE ALLOWED, PIPE SPACING SHALL MAINTAIN A MINIMUM CLEAR DISTANCE OF TWO (2) INCHES.
3. WHERE THREE OR MORE PIPES ARE REQUIRED, A RECTANGULAR 8" OR WIDER X 3" GALVANIZED STEEL CHANNEL SHALL BE USED, AND SHALL MAINTAIN THE MINIMUM CLEAR DISTANCES. SEE SECTION B'–B'.
4. CURB FACE DRAIN OUTLET MAY BE USED ONLY AT LOCATIONS APPROVED BY THE CITY ENGINEER.

DRAWN BY: K. TRAN	CURB FACE DRAINAGE OUTLET	SD-1
CHECKED BY: F. AMIN		
APPROVED BY: G. GOMEZ		
DATE: OCTOBER 2013	CITY OF SANTA CLARA	PAGE: 29